White Deluxe Valet Podium

Upscale Look, Enhanced Security, Electronics Ready

We increased the width of our Deluxe Valet Podium and added a counter above the working surface to give this podium a premium look. We also added a Key Drop Box to the side of the unit so that keys can be deposited quickly and securely without the need to unlock the podium. An anchor loop allows the podium to be secured, a lockable Tip Box is installed in the drawer to manage tips and a locking bar adds additional security. A grommet is installed in the working surface and base of the podium so electronics can be easily routed through the unit.

Basic Features

- Countertop with brushed stainless steel trim
- Key drop hole with theft guard
- Electronic compatible
- Tip box(white finish) installed
- Locking security bar
- Anchor loop
- 16 gauge, heavy-duty sheet metal construction
- 50-200 key capacity
- Scratch-resistant textured white finish
- Staggered key hooks w/ black, screen printed numbers
- Zinc hardware
- Brushed stainless steel working surface
- Umbrella holder
- 4 Locking casters
- 2 Slam-action locks with 2 keys
- Tip slot
- Replaceable parts
- Pre-assembled
- Manufacturer's Warranty

Dimensions: 36.5"W x 24"D x 49"H
Weight: 125 lbs.

Upgrade Options

Door Lock

Dual key/ combination cam lock + $50.00

Schlage Keypad Lock + $320.00

Ultraloq UL3 Lock + $330.00

Key hooks

100 + $40.00

150 + $80.00

200 + $120.00

Sneeze Guards

1 Panel + $160.00

3 Panel + $215.00

Exterior

LED Kit + $299.00

Miscellaneous

Cash Tray Drawer Insert + $55

Heavy Duty Lockable Tip Box + $49.95

Heavy Duty Casters + $20.00

Short Shelf + $25.00

Long Shelf + $35.00

Accessories

Podium Cover + $39.95

Valet Umbrella + $169.95

Valet Flap Umbrella + $189.95

Key Fob Pouch + $15/ pack of 10

Key Fob Pouch - RFID Protection
+ $25 / pack of 5

THE VALET SPOT™

1-877-977-8733
www.thevaletspot.com

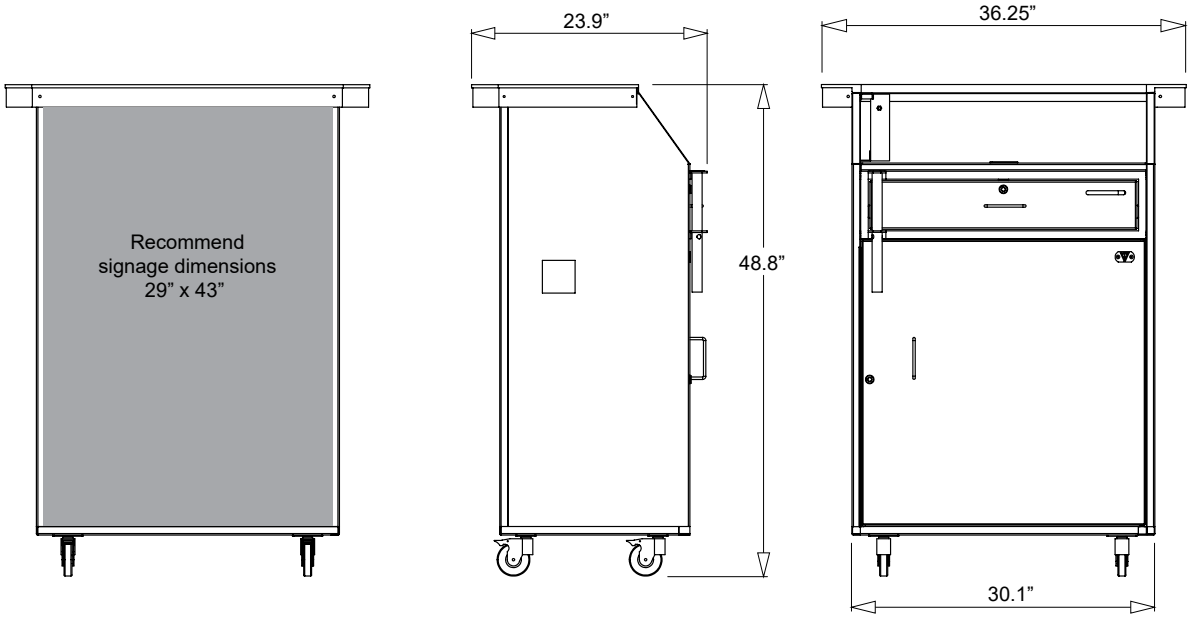

TOTAL COST BEFORE DELIVERY	**$869.95** (basic options)